MODEL A95

Ceiling Radiation Damper • Two Uninsulated Blades • Round Frame • For Static Systems • Galvanized Steel

Standard Materials and Construction

FRAME: 22-GA galvanized steel, one piece, 3 27/32" standard depth.
BLADES: 22-GA galvanized steel.
INSULATION: ½" thick gypsum.
FUSIBLE LINK: 165˚F.
SPRING: Extension type.
FINISH: Mill.

Options

212˚F Fusible Link
Thermal Blanket
Top Extension (total frame depth 7½")
Bottom Extension (total frame depth 5½")
Top and Bottom Extension (total frame depth 9⅞")

Notes

1. The larger dimension is always the width, and is parallel to the blades.
2. Dampers are provided ¼" undercut on 1" increments.
   Standard ¼" undercut:
   A. For installation where the damper is to be installed inside a steel duct.
   B. For lay-in installation where the damper is to be installed directly into the tee bar grid of the ceiling.
   Optional Exact Size (No undercut) :
   For surface mount ductless installation, where the damper is to be installed over the neck of a grille or lay-in diffuser.
3. This ceiling damper is used to provide the required fire and heat radiation protection of HVAC penetrations of floor, ceiling and roof-ceiling assemblies with restrained or unrestrained assembly Fire Resistance Ratings of 2 hour or less, in accordance with UL-263. Standard fire dampers (1½ hr. and 3 hr.) do not provide the necessary heat radiation protection. Ceiling dampers are also called Ceiling Fire Dampers, Radiation Dampers, and Radiation Shields. See our UL-Approved Installation Instructions for various installation requirements and procedures. Approved ceiling designs are illustrated by design number in UL's Fire Resistance Directory.

Damper Sizes

Horizontal (Ceiling) Mount Only	
Min Panel	Max Panel
5¾" dia.	11" dia. (95 sq.in.)

UNDERWRITERS LABORATORIES INC.®
CLASSIFIED STATIC CEILING DAMPER
FIRE RESISTANCE RATING 2 HR
ARROW UNITED INDUSTRIES
FILE # R16561

This ceiling radiation damper meets the construction and performance requirements of:

- Underwriters Laboratories Inc. Standards 555C
- National Fire Protection Association Standards 90A and 101
- New York City MEA Listing #110-99-M
- California State Fire Marshal Listing #3226-1328:105
- 1 hour Combustible Ceiling Assemblies
- 1 hour and 2 hour Non-Combustible Ceiling Assemblies

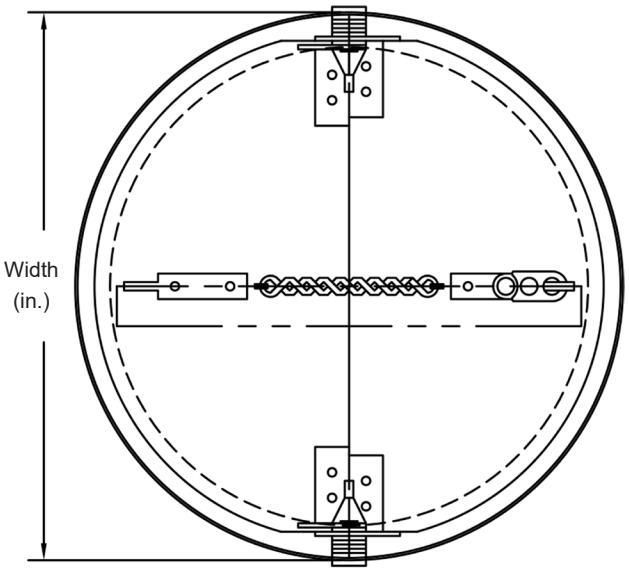

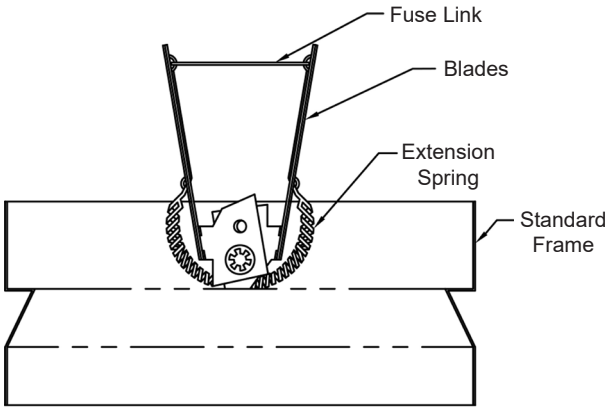

Item #	Qty	Damper Size	Top	Bottom	165°F	212°F			
			Extensions		Fusible Link				Union Made
Arch. / Eng.:					EDR:		ECN:		Job:
Contractor:									
Project:					Date:		DWN:		DWG: